computar

M0814-VSW

f=8mm F1.4 ViSWIR Lite
for Visible+SWIR image sensor, Fixed-focal
C-Mount

Model No.		M0814-VSW		Effective Lens Aperture	Front	φ21.5mm	
Focal Length		8mm			Rear	φ12.0mm	
Max. Aperture Ratio		1:1.4		Distotion	2/3type	-0.1%(y=5.5)	
Max. Image Format		8.8mm x 6.6mm(φ11mm)			1/2type	-1.1%(y=4.0)	
Transmittance Wavelength Range		400nm - 1700nm		Back Focal Length		13.1mm	
Operation Range	Iris	F1.4 - F16C		Flange Back Length		17.526mm	
	Focus	0.1m - Inf.		Mount		C-Mount	
Control	Iris	Manual		Filter Size		M30.5 P=0.5mm	
	Focus	Manual		Dimensions		φ33.5mm x 28.2mm	
Operating Temperature		-10℃ - +50℃		Weight		62.6g	
Angle of View	D	IMX990	53.0°	IMX991	27.9°	2/3 type	67.1°
	H	6.40mm x 5.12mm	42.5°	3.20mm x 2.56mm	21.9°		56.3°
	V	(φ8.20mm)	34.5°	(φ4.10mm)	17.6°		43.7°
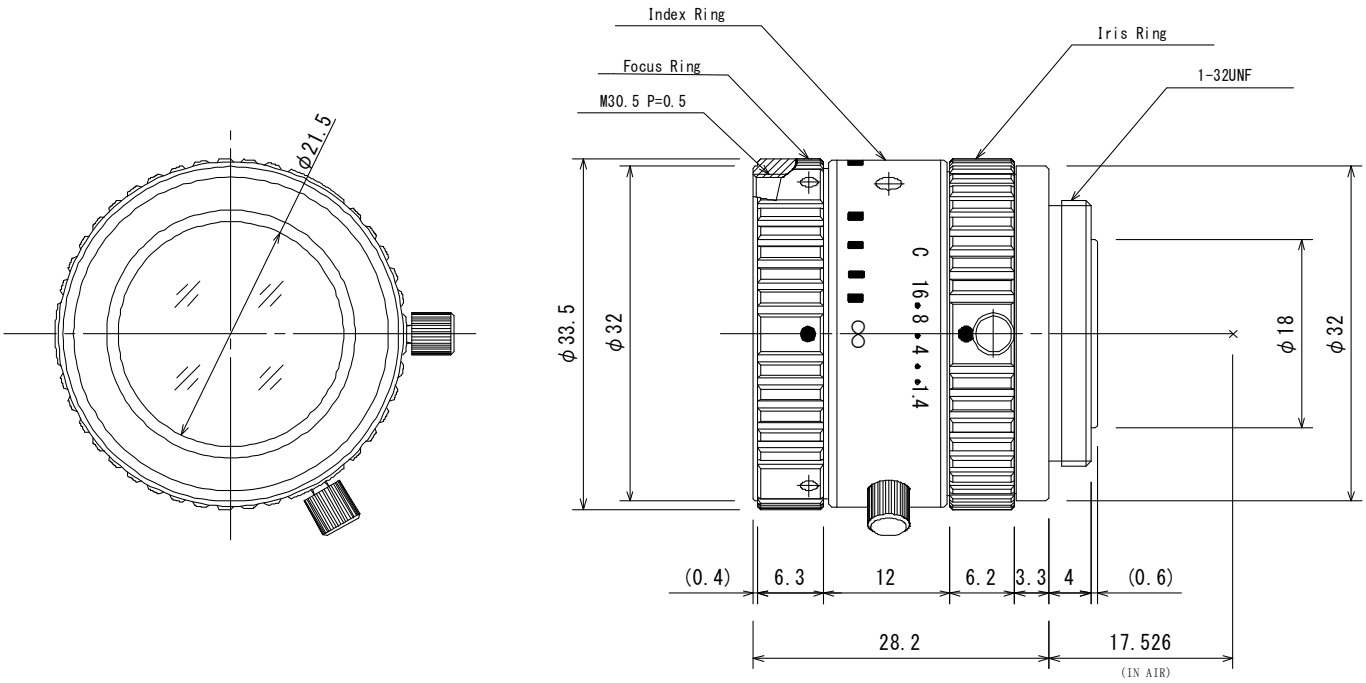
Dimensions